siegmund

WELDING TABLES AND CLAMPING SYSTEMS

NEW DESIGN

THE REVOLUTION: SIEGMUND WORKBENCH

from **760 £**

Prices plus VAT.

A WORKBENCH FROM THE WORLD MARKET LEADER FOR WELDING TABLES

Success story from Oberottmarshausen

More than 30 years ago, company founder Bernd Siegmund created a group of companies that is now active worldwide through constant innovations and product developments. As an owner-managed family business and the world's number 1 when it comes to welding tables, we are globally positioned with five locations across Europe and a sales network in over 60 countries.

Our products stand for maximum functionality and exclusive design and are used in almost all industries. In addition to machine, plant, metal and vehicle construction, they are particularly popular in prototype construction and series production with and without robot connection. The welding and clamping table systems are based on a well thought-out and flexible modular system. In combination with our large variety of accessories, we offer a simple and time-saving solution for every challenge.

The enthusiasm of our customers encourages us to new developments and innovative solution concepts. Our aim is to stick to this vision and to constantly develop ourselves and our products. We are able to do this with the help of our employees, who are committed to the company every day with heart, mind and energy.

With innovative strength, determination and the consistent pursuit of our visions, we not only want to maintain our success and our world market leadership, but continue to expand it.

Deggingen (D)

Skawina (PL)

Lublin (PL)

Oberottmarshausen (D)

Products

	i	16
The Revolution: Siegmund Workbench	04	
Siegmund Workbench – with steel plate All-rounder: Solid steel plate	06	12
Siegmund Workbench – with aluminum table profile More flexibility with the aluminum table profiles	08	16
Siegmund Workbench – Accessories Machine table, Extension, Sub Table Box, ...	10	22
Other products from Siegmund	26	

Icon index

Materials

- AL — **Aluminum**
- 750 — **Premium steel S355J2+N**

Material characteristics

- **Scratch resistant & Corrosion resistant**
  The surface provides relatively good corrosion protection in dry environments
- N — **Nitration**
  improves impact resistance and protects against weld spatter adhesion
- BAR — **BAR-coating (Black-Anti-Rust-coating)**
  smoothes the surface and increases the rust prevention
- B — **Blueing**
  Protection against corrosion

Product characteristics

- 100 — **Scale**
- **Hexagon socket**

Boring Grid

- **50x50 mm Grid**
- **Hexagon Slot**

- ● Item produced for stock
- ○ Item produced on order

NEW THE REVOLUTION: SIEGMUND WORKBENCH

A workbench is an essential tool in every workshop. It offers a stable work surface usable for various tasks such as metal and woodworking, repairs or assemblies.

We are revolutionizing the workbench market by combining the qualities of a common workbench with the strengths of our Siegmund welding tables and the extensive modular system. This results in an innovative workbench for everyone – the Siegmund workbench.

To meet the needs of every craftsman and their challenges, the Siegmund workbench is available in different versions: with a solid steel plate for welding work or with aluminum table profiles for maximum flexibility. Due to cost-effective production through high quantities, we can offer you a high-quality and affordable Siegmund workbench that is also excellent for DIY projects at home.

- different work surfaces to choose from
- different sizes
- light and robust base frame
- Flexibility through borehole grid
- height adjustable legs
- Maximum recommended table loading: approx. 250 kg
- exclusive Siegmund design
- compatible with Siegmund accessories

www.siegmund.com/
F-workbench

Your advantages

1 Steel plate
- perforated plate made of high-quality steel S355J2+N
- plasma nitrided and BAR coated
- Material thickness approx. 12 mm
- Boreholes on the surface 50x50 mm grid

2 Aluminum table profile
- Aluminum table top
- Material thickness approx. 24 mm
- Boreholes on the surface 50x50 mm grid
- with transverse slots in a hexagon shape

3 Further Accessories
- Sub Table Box: practical storage space, lockable
- Machine table
- Tool holder
- Clamps
- various squares and stops
- constant expansion of accessories

4 Base frame
- Base frame made of aluminum profiles
- Maximum recommended table loading: approx. 250 kg
- exclusive Siegmund design

5 Legs
- Slot for mounting squares, stops, etc.
- available as a fixed and height-adjustable version
- with fine adjustment
- Optionally with castors

NEW ALL-ROUNDER: SOLID STEEL PLATE

Stability, durability and functionality characterize our plasma-nitrided high-precision steel plates. These extremely robust plates withstand high loads and temperature variations without deforming. The machining of the boreholes is carried out in highly precise drilling and milling centers and is not cheap laser processing.

Our unique plasma nitriding process creates a scratch-resistant, corrosion-resistant and resilient surface that is protected against damage from tools or workpieces.

Your advantages

- premium steel S355J2+N, plasma nitrided and BAR-coated
- Low-wear and durable surfaces
- The surface provides relatively good corrosion protection in dry environments
- Significantly less welding spatter adhesion
- proven Siegmund system boreholes (Ø 16 mm)
- high-precision boreholes with chamfers at the top and bottom
- our recommendation for welding and assembly work

16 Page: 12

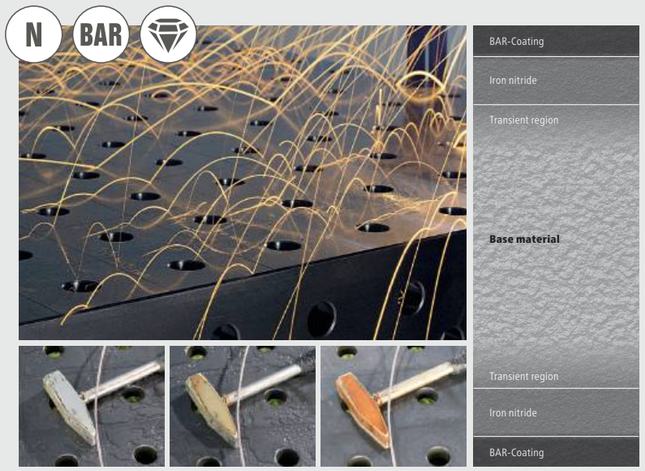

What is plasma nitration?

Plasma nitriding is a thermochemical diffusion process for surface layer hardening. The surface layer of a workpiece or component is enriched with nitrogen, which forms a wear and corrosion protection layer on the component surface and in the area close to the surface. The manufacturing process takes place under vacuum at around 500 degrees Celsius. In conjunction with additional production steps, we achieve a nearly distortion-free product.

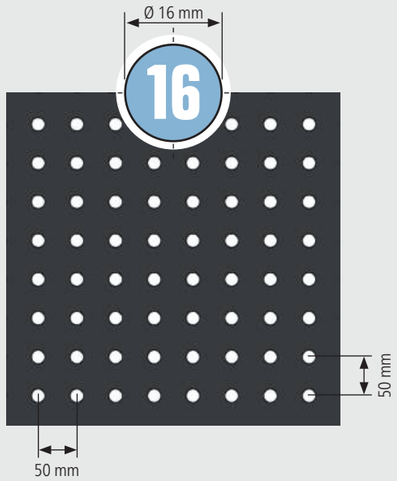

NEW MORE FLEXIBILITY WITH THE ALUMINUM TABLE PROFILES

The workbench with aluminum table profiles is equipped with hexagon slots and system boreholes. This creates additional clamping and fastening options both on the table surface and on the short sides of the workbench.

Various sliding blocks in combination with clamping bushings create endless fastening options for components of all kinds. We recommend our workbench with aluminium table profiles for any assembly and any type of metal, wood or plastic material.

Your advantages

- table profiles can be exchanged individually
- proven Siegmund system boreholes (Ø 16 mm)
- additional clamping options in hexagon slot
- sliding blocks with M5 or M6 thread
- our recommendation for assembly or woodwork

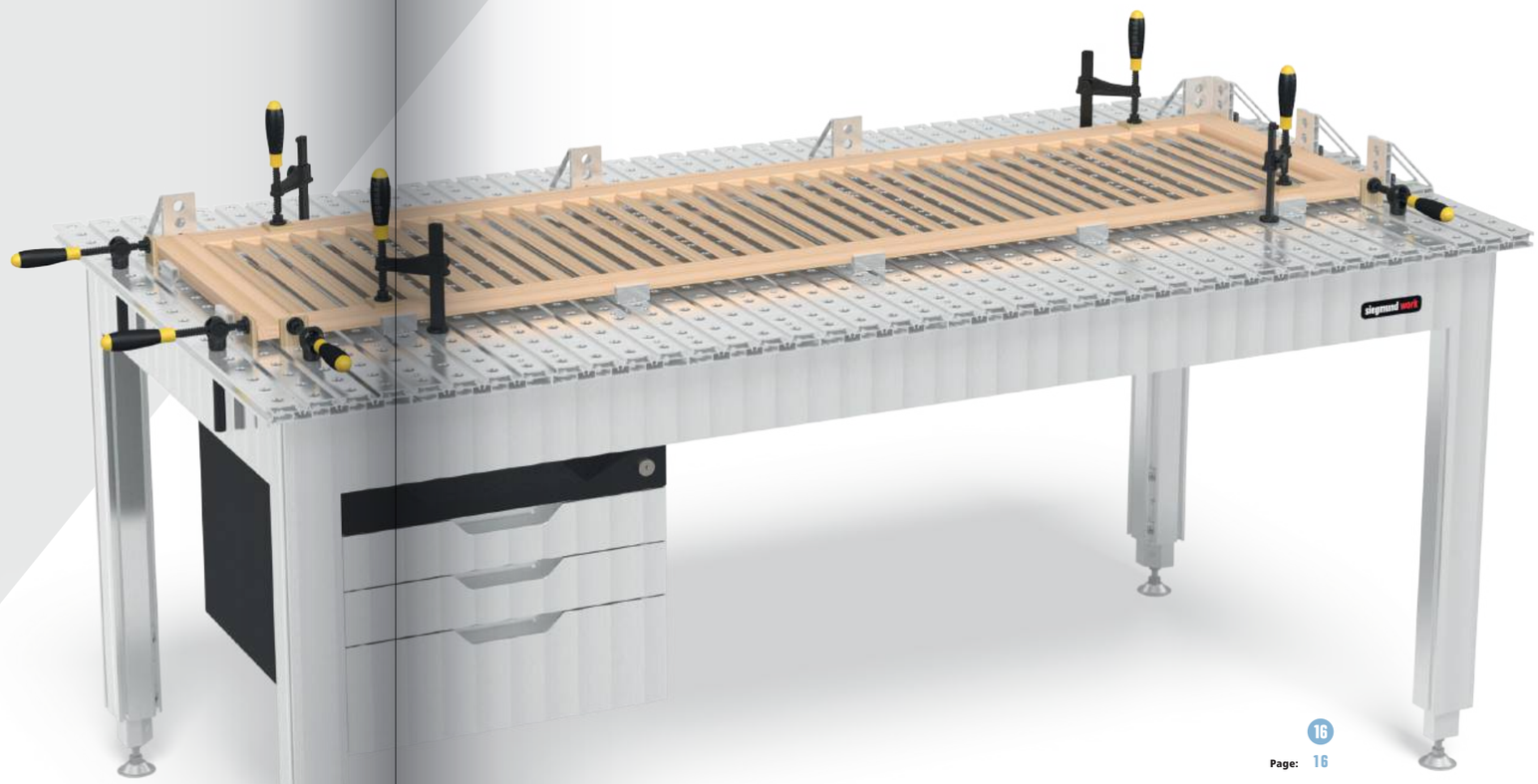

Page: 16

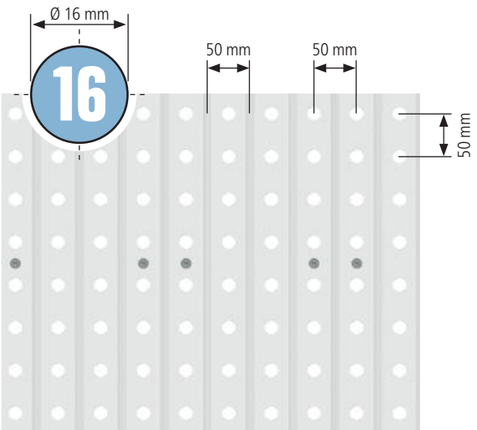

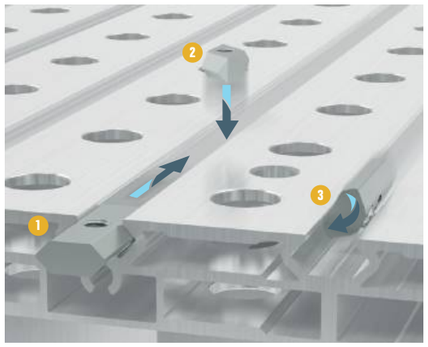

Various Sliding Blocks

All sliding blocks are equipped with a thread for fixing components. Depending on the shape, the sliding blocks can be inserted into the slot from the side or from above.

1. Sliding block HX8 with ball
2. Sliding block HX8 rotatable
3. Sliding block HX8 insertable with ball

NEW CREATE YOUR OWN INDIVIDUAL WORKBENCH

Expanding the work surface with extensions

No matter how large a work surface is, in the end it could always be a little bigger. With our extensions you can easily expand the work surface of your workbench, whether as tool storage, for larger workpieces or for more flexibility and working comfort.

The extension can be easily mounted into the hexagon slot of the base frame of the workbench with just a few steps.

Your workshop.
Your project.
Your workbench.

Page: 16 22

www.siegmund.com/
F-workbench

Integration of your machines with machine tables

With our machine tables you can securely attach your stationary machines to the Siegmund workbench, so that they are ready for use at any time. Whether drill, saw or milling machine, the freely movable sliding blocks in the hexagonal slot of the aluminum table profiles adapt to the mounting holes of your machines.

Create your own individual work environment that is perfectly fitted to you!

EXCLUSIVE OFFERS

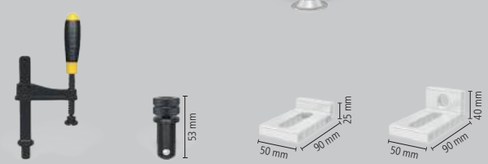

4x 160621 8x 160511 4x 160108.A 4x 160109.A

16 AL 750 N BAR

Siegmund workbench height adjustable with steel plate 1200x800 mm incl. accessories

- Base frame made of aluminum profiles
- Height adjustable, Working height 800-975 mm
- Perforated plate: premium steel S355J2+N + Plasma nitration
- Borehole Ø 16 mm, Boreholes on the surface 50x50 mm grid
- Maximum load capacity: 250 kg
- Fast Clamping Bolts without slot double are recommended

1.015 £

instead of 1.526 £

2-WS161208.1

Prices plus VAT.

16 AL 750 N BAR

Siegmund workbench height adjustable with steel plate 1500x1000 mm incl. accessories

- Base frame made of aluminum profiles
- Height adjustable, Working height 800-975 mm
- Perforated plate: premium steel S355J2+N + Plasma nitration
- Borehole Ø 16 mm, Boreholes on the surface 50x50 mm grid
- Maximum load capacity: 250 kg
- Fast Clamping Bolts without slot double are recommended

1.417 £

instead of 1.909 £

2-WS161510.1

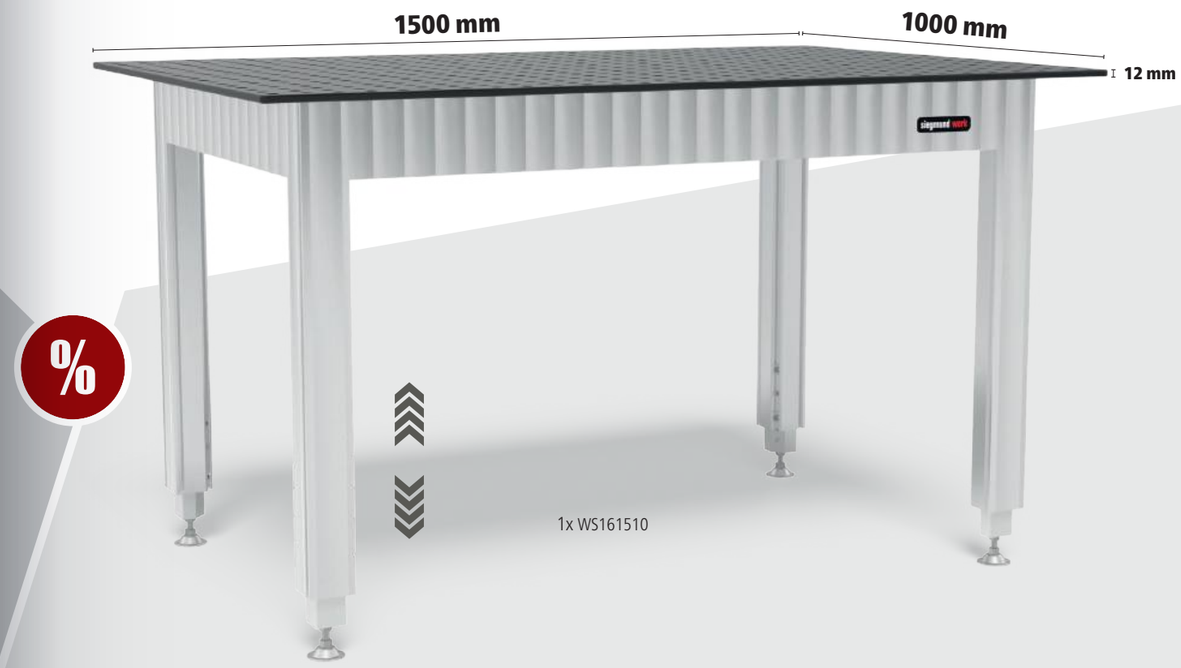

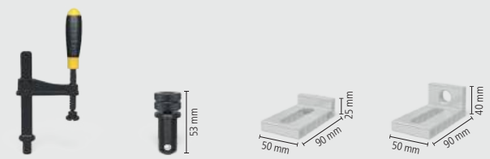

4x 160621 8x 160511 4x 160108.A 4x 160109.A

Siegmund workbench height adjustable with steel plate

- Base frame made of aluminum profiles
- Height adjustable, Working height 800-975 mm
- Perforated plate: premium steel S355J2+N + Plasma nitration
- Borehole Ø 16 mm, Boreholes on the surface 50x50 mm grid
- Maximum load capacity: 250 kg
- Fast Clamping Bolts without slot double are recommended

	Specifications Working surface	L (a)	B (b)	MS (d)	G		
2-WS161208	16 AL 750 N BAR	1200 mm	800 mm	12 mm	100 kg	**993 £**	•
2-WS161510	16 AL 750 N BAR	1500 mm	1000 mm	12 mm	148 kg	**1.376 £**	•
2-WS161607	16 AL 750 N BAR NEW	1600 mm	700 mm	12 mm	116 kg	**1.351 £**	•
2-WS162010	16 AL 750 N BAR NEW	2000 mm	1000 mm	12 mm	194 kg	**1.937 £**	•

The workbenches with steel plate 1500x1000 mm and 2000x1000 mm are compatible with our extensions for perforated plates. (Item no. 164050.Set, 164055.Set, 164051.Set)

More information and product versions:

www.siegmund.com/
F-workbench-steel

Prices plus VAT. Available from 01.05.2024

Siegmund Workbench with steel plate

- Base frame made of aluminum profiles
- Working height 900 mm
- Perforated plate: premium steel S355J2+N + Plasma nitration
- Borehole Ø 16 mm, Boreholes on the surface 50x50 mm grid
- Maximum load capacity: 250 kg
- Fast Clamping Bolts without slot double are recommended

	Specifications Working surface	L (a)	B (b)	MS (d)	G		
2-WS161208.L	16 AL 750 N BAR NEW	1200 mm	800 mm	12 mm	98 kg	**867 £**	•
2-WS161510.L	16 AL 750 N BAR NEW	1500 mm	1000 mm	12 mm	146 kg	**1.247 £**	•
2-WS161607.L	16 AL 750 N BAR NEW	1600 mm	700 mm	12 mm	114 kg	**1.222 £**	•
2-WS162010.L	16 AL 750 N BAR NEW	2000 mm	1000 mm	12 mm	191 kg	**1.810 £**	•

L: Length, B: Width, MS: Material thickness, G: Weight

EXCLUSIVE OFFERS

More flexibility with the aluminum table profiles

1x WA161208.L

4x 160621

8x 160590

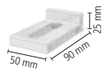

4x 160108.A

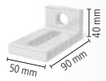

4x 160109.A

16 AL

Siegmund Workbench with aluminum table profile 1200x800 mm incl. accessories

%

- Base frame made of aluminum profiles
- Working height 900 mm
- Surface made of aluminum table profiles
- Borehole Ø 16 mm, Borehole spacing 50 mm
- Hexagon Slot HX8, Hexagon Slot distance 50 mm
- Maximum load capacity: 250 kg
- Areal Clamping Bolts are recommended
- When clamping aluminum parts, the bolts must only be tightened hand-tight.

922 £

instead of 1.425 £

2-WA161208.L.1

Prices plus VAT. Available from 01.05.2024

16 AL

Siegmund Workbench with aluminum table profile 2000x1000 mm incl. accessories

- Base frame made of aluminum profiles
- Working height 900 mm
- Surface made of aluminum table profiles
- Borehole Ø 16 mm, Borehole spacing 50 mm
- Hexagon Slot HX8, Hexagon Slot distance 50 mm
- Maximum load capacity: 250 kg
- Areal Clamping Bolts are recommended
- When clamping aluminum parts, the bolts must only be tightened hand-tight.

1.499 £

instead of 1.998 £

2-WA162010.L.1

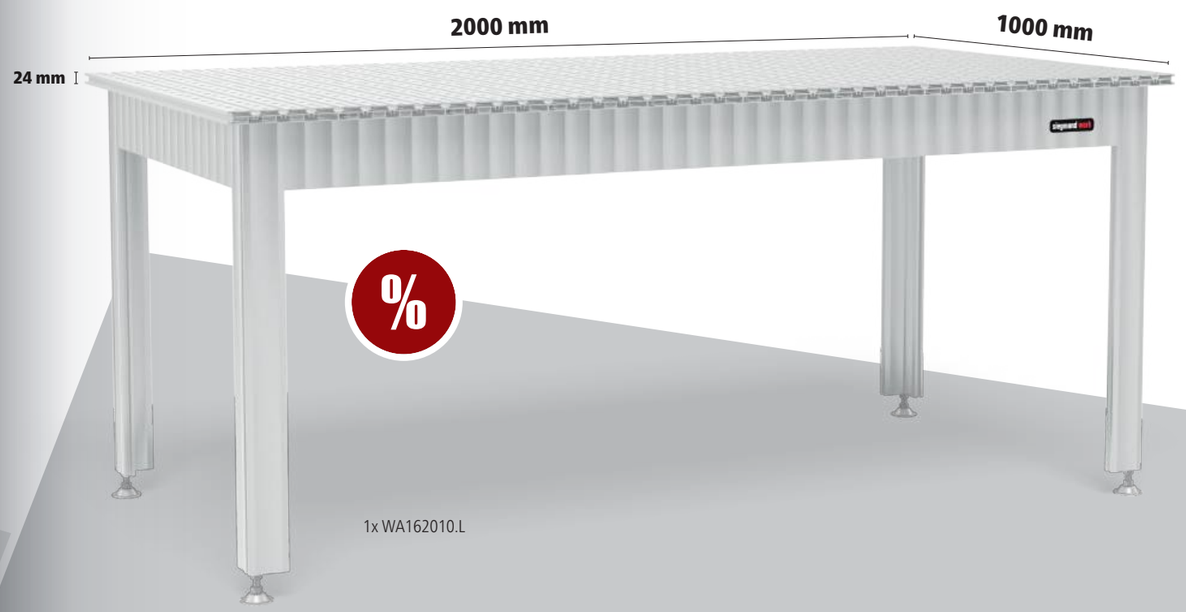

1x WA162010.L

4x 160621

8x 160590

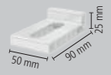

4x 160108.A

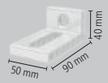

4x 160109.A

Siegmund workbench height adjustable with aluminum table profile

- Base frame made of aluminum profiles
- Height adjustable, Working height 800-975 mm
- Surface made of aluminum table profiles
- Borehole Ø 16 mm, borehole spacing 50 mm
- Hexagon Slot HX8, Hexagon Slot distance 50 mm
- Maximum load capacity: 250 kg
- Areal Clamping Bolts are recommended
- When clamping aluminum parts, the bolts must only be tightened hand-tight.

	Specifications Working surface	L (a)	B (b)	MS (d)	G		
2-WA161207	16 AL NEW	1200 mm	700 mm	24 mm	37 kg	**847 £**	•
2-WA161208	16 AL NEW	1200 mm	800 mm	24 mm	48 kg	**876 £**	•
2-WA161210	16 AL NEW	1200 mm	1000 mm	24 mm	45 kg	**1.019 £**	•
2-WA161607	16 AL NEW	1600 mm	700 mm	24 mm	46 kg	**1.032 £**	•
2-WA161608	16 AL NEW	1600 mm	800 mm	24 mm	49 kg	**1.104 £**	•
2-WA161610	16 AL NEW	1600 mm	1000 mm	24 mm	57 kg	**1.249 £**	•
2-WA162007	16 AL NEW	2000 mm	700 mm	24 mm	52 kg	**1.220 £**	•
2-WA162008	16 AL NEW	2000 mm	800 mm	24 mm	56 kg	**1.308 £**	•
2-WA162010	16 AL NEW	2000 mm	1000 mm	24 mm	66 kg	**1.482 £**	•

Extension for workbench height adjustable

Extension 400 for workbench height adjustable NEW

for workbench height adjustable, extension of the work surface by 400 mm, Height adjustable (800-975 mm), Pay attention to the base frame width of the workbench!

	L (a)	B (b)	H (c)	MS (d)	G		
2-XA160407	400 mm	700 mm	800 mm	24 mm	14 kg	**332 £**	•
2-XA160408	400 mm	800 mm	800 mm	24 mm	15 kg	**349 £**	•
2-XA160410	400 mm	1000 mm	800 mm	24 mm	16,50 kg	**389 £**	•

Extension 600 for workbench height adjustable NEW

for workbench height adjustable, extension of the work surface by 600 mm, Height adjustable (800-975 mm), Pay attention to the base frame width of the workbench!

	L (a)	B (b)	H (c)	MS (d)	G		
2-XA160607	600 mm	700 mm	800 mm	24 mm	18 kg	**427 £**	•
2-XA160608	600 mm	800 mm	800 mm	24 mm	20 kg	**452 £**	•
2-XA160610	600 mm	1000 mm	800 mm	24 mm	22,50 kg	**509 £**	•

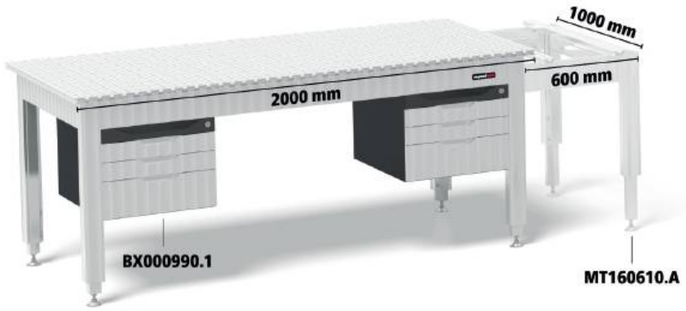

Prices plus VAT. Available from 01.05.2024

Siegmund Workbench with aluminum table profile

- Base frame made of aluminum profiles
- Working height 900 mm
- Surface made of aluminum table profiles
- Borehole Ø 16 mm, borehole spacing 50 mm
- Hexagon Slot HX8, Hexagon Slot distance 50 mm
- Maximum load capacity: 250 kg
- Areal Clamping Bolts are recommended
- When clamping aluminum parts, the bolts must only be tightened hand-tight.

	Specifications Working surface	L (a)	B (b)	MS (d)	G		
2-WA161207.L	16 AL NEW	1200 mm	700 mm	24 mm	34 kg	**760 £**	•
2-WA161208.L	16 AL NEW	1200 mm	800 mm	24 mm	36 kg	**817 £**	•
2-WA161210.L	16 AL NEW	1200 mm	1000 mm	24 mm	42 kg	**932 £**	•
2-WA161607.L	16 AL NEW	1600 mm	700 mm	24 mm	43 kg	**945 £**	•
2-WA161608.L	16 AL NEW	1600 mm	800 mm	24 mm	46 kg	**1.018 £**	•
2-WA161610.L	16 AL NEW	1600 mm	1000 mm	24 mm	54 kg	**1.162 £**	•
2-WA162007.L	16 AL NEW	2000 mm	700 mm	24 mm	49 kg	**1.132 £**	•
2-WA162008.L	16 AL NEW	2000 mm	800 mm	24 mm	53 kg	**1.220 £**	•
2-WA162010.L	16 AL NEW	2000 mm	1000 mm	24 mm	63 kg	**1.395 £**	•

Extension for workbench

Extension 400 for workbench NEW

for workbench without height adjustment, extension of the work surface by 400 mm, Pay attention to the base frame width of the workbench!

	L (a)	B (b)	H (c)	MS (d)	G		
2-XA160407.L	400 mm	700 mm	900 mm	24 mm	13 kg	**284 £**	•
2-XA160408.L	400 mm	800 mm	900 mm	24 mm	14,50 kg	**301 £**	•
2-XA160410.L	400 mm	1000 mm	900 mm	24 mm	15,50 kg	**342 £**	•

Extension 600 for workbench NEW

for workbench without height adjustment, extension of the work surface by 600 mm, Pay attention to the base frame width of the workbench!

	L (a)	B (b)	H (c)	MS (d)	G		
2-XA160607.L	600 mm	700 mm	900 mm	24 mm	17 kg	**380 £**	•
2-XA160608.L	600 mm	800 mm	900 mm	24 mm	19 kg	**405 £**	•
2-XA160610.L	600 mm	1000 mm	900 mm	24 mm	21,50 kg	**462 £**	•

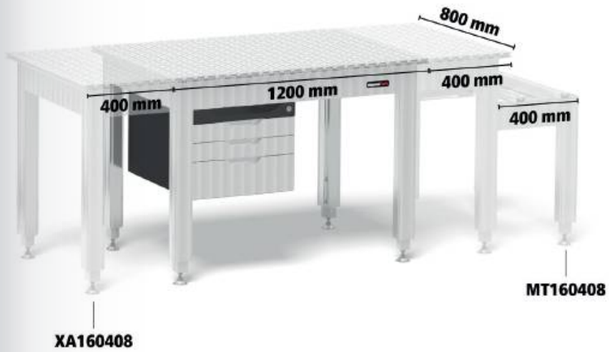

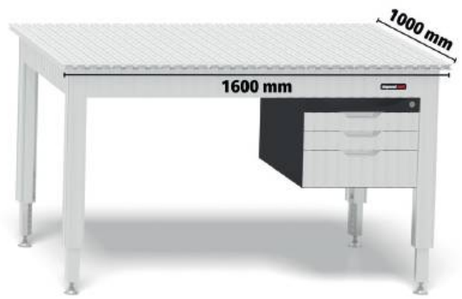

L: Length, B: Width, MS: Material thickness, G: Weight, H: Height

Various sliding blocks

Set Sliding Block HX8 NEW

pack of 4, with thread, attachment of accessories with screw, Galvanized, insertion into the slot from the side, non-slip fit in the slot thanks to a spring ball

16

		L (a)	B (b)	H (c)	G	
2-000551	M6	30 mm	15 mm	7 mm	0,08 kg	**10 £** •

Set Sliding Block HX8 rotatable NEW

pack of 4, with thread, attachment of accessories with screw, Galvanized, enables placement in the slot from above, tensions in the slot when turning in the direction of fastening the screw, Further versions available online: with M5 thread

16

		L (a)	B (b)	H (c)	G	
2-000552.2	M6	20 mm	15 mm	7 mm	0,04 kg	**10 £** •

Set Sliding Block HX8 insertable NEW

pack of 4, with thread, attachment of accessories with screw, Galvanized, insertion into the slot from above, non-slip fit in the slot thanks to a spring ball, Further versions available online: with M5 thread

16

		L (a)	B (b)	H (c)	G	
2-000553.2	M6	30 mm	12 mm	7 mm	0,08 kg	**10 £** •

Clamp Bushings

Set Clamp Bushing with collar for M6 thread burnished NEW

pack of 4, for fastening Siegmund parts to sliding blocks, for clamping in a elongated hole, incl. screw M6x20, incl. self-tapping countersunk head screw M6x30

B 16

	H (c)	Ø	G	
2-160546.3	13 mm	23 mm	0,08 kg	**32 £** •

Set Clamp Bushing with countersunk head for M6 thread burnished NEW

pack of 4, for fastening Siegmund parts to sliding blocks, for clamping in boreholes, incl. screw M6x20, incl. self-tapping countersunk head screw M6x30

B 16

	H (c)	Ø	G	
2-160546.4	7 mm	18,50 mm	0,08 kg	**21 £** •

Set Sliding Block insertable + Clamp Bushing NEW

Delivery contents: 1x 000553.2 Set Sliding Block HX8 M6 insertable (pack of 4), 1x 160546.3 Set Clamp Bushing with collar (pack of 4)

16

	G	
2-160548	0,16 kg	**39 £** •

More information and product versions:

www.siegmund.com/
F-workbench-alu

Prices plus VAT. Available from 01.05.2024

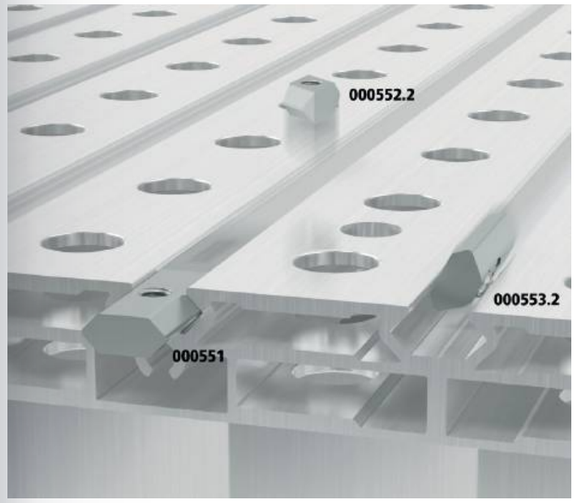

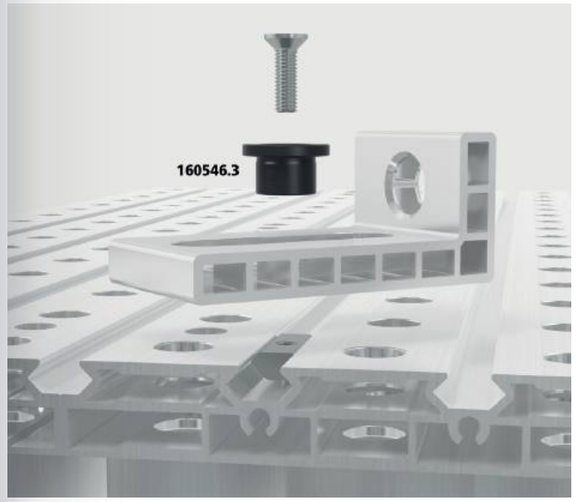

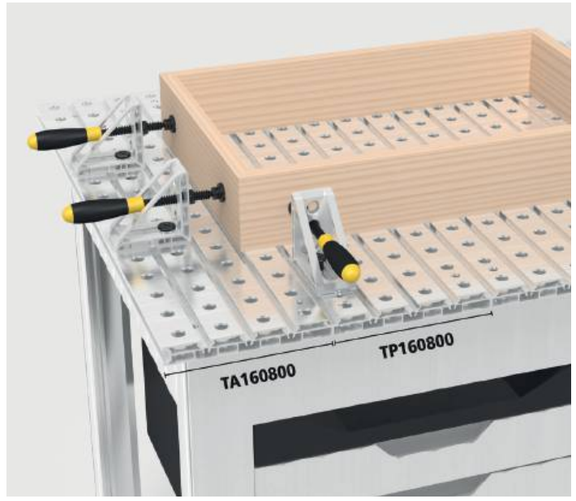

Aluminum table profile

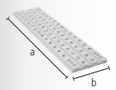

Aluminum table profile NEW

Borehole Ø 16 mm, borehole spacing 50 mm, Hexagon Slot HX8, Hexagon Slot distance 50 mm, inner profile, Pay attention to the base frame width of the workbench!

AL 16

	L (a)	B (b)	MS (d)	G	
2-TP160700	700 mm	200 mm	24 mm	2,85 kg	**59 £** •
2-TP160800	800 mm	200 mm	24 mm	3,30 kg	**66 £** •
2-TP161000	1000 mm	200 mm	24 mm	4,10 kg	**84 £** •

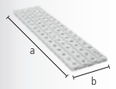

Aluminum table end profile NEW

Borehole Ø 16 mm, borehole spacing 50 mm, Hexagon Slot HX8, Hexagon Slot distance 50 mm, outer profile, with lateral hexagon slot on one side, Pay attention to the base frame width of the workbench!

AL 16

	L (a)	B (b)	MS (d)	G	
2-TA160700	700 mm	200 mm	24 mm	2,90 kg	**59 £** •
2-TA160800	800 mm	200 mm	24 mm	3,35 kg	**66 £** •
2-TA161000	1000 mm	200 mm	24 mm	4,15 kg	**84 £** •

L: Length, B: Width, H: Height, G: Weight, Ø: Diameter, MS: Material thickness

siegmund

Equipment

Equipment with 4 castors for workbench NEW
Caster, locking brake
16

	TF	G	
2-004100.2	250 kg	2,40 kg	**66 £** •

Equipment with 2 wheels for machine table / extension NEW
Caster, locking brake
16

	TF	G	
2-004100.3	125 kg	1,20 kg	**33 £** •

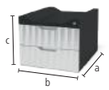

Sub Table Box for workbench incl. 2 drawers NEW
Drawer box, 2x Drawer 160 mm, lockable, incl. two keys, drawer pull-out length 500 mm
AL 16

	L (a)	B (b)	H (c)	TF	G	
2-BX000990	623 mm	472 mm	387 mm	100 kg	27 kg	**358 £** •

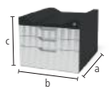

Sub Table Box for workbench incl. 3 drawers NEW
Drawer box, 2x Drawer 80 mm, 1x Drawer 160 mm, lockable, incl. two keys, drawer pull-out length 500 mm
AL 16

	L (a)	B (b)	H (c)	TF	G	
2-BX000990.1	623 mm	472 mm	387 mm	100 kg	30 kg	**411 £** •

Tool holder for workbench NEW
Aluminum, can be placed on the left and right, Holder for clamps, bolts and squares, Pay attention to the base frame width of the workbench and the material used for the work surface!
AL 16

		L (a)	B (b)	H (c)	G	
2-TH160700	700 AL / Steel	475 mm	55 mm	52 mm	1,10 kg	**46 £** •
2-TH160800	800 AL / Steel	575 mm	55 mm	52 mm	1,30 kg	**53 £** •
2-TH161000.S	1000 Steel	675 mm	55 mm	52 mm	1,50 kg	**59 £** •
2-TH161000.A	1000 AL	775 mm	55 mm	52 mm	1,60 kg	**67 £** •

Prices plus VAT. Available from 01.05.2024

Machine table for workbench

Machine table 400 for workbench NEW
compatible with workbench frame with and without height adjustment, Height adjustable (625-900 mm), Pay attention to the base frame width of the workbench and the material used for the work surface!
AL 16

		L (a)	B (b)	H (c)	TF	G	
2-MT160407	700 AL / Steel	400 mm	700 mm	625 mm	75 kg	9 kg	**284 £** •
2-MT160408	800 AL / Steel	400 mm	800 mm	625 mm	75 kg	11 kg	**298 £** •
2-MT160410.S	1000 Steel	400 mm	1000 mm	625 mm	75 kg	11 kg	**333 £** •
2-MT160410.A	1000 AL	400 mm	1000 mm	625 mm	75 kg	12 kg	**336 £** •

Machine table 600 for workbench NEW
compatible with workbench frame with and without height adjustment, Height adjustable (625-900 mm), Pay attention to the base frame width of the workbench and the material used for the work surface!
AL 16

		L (a)	B (b)	H (c)	TF	G	
2-MT160607	700 AL / Steel	600 mm	700 mm	625 mm	75 kg	11 kg	**311 £** •
2-MT160608	800 AL / Steel	600 mm	800 mm	625 mm	75 kg	12 kg	**327 £** •
2-MT160610.S	1000 Steel	600 mm	1000 mm	625 mm	75 kg	12 kg	**362 £** •
2-MT160610.A	1000 AL	600 mm	1000 mm	625 mm	75 kg	13 kg	**364 £** •

G: Weight, TF: Load capacity, L: Length, B: Width, H: Height

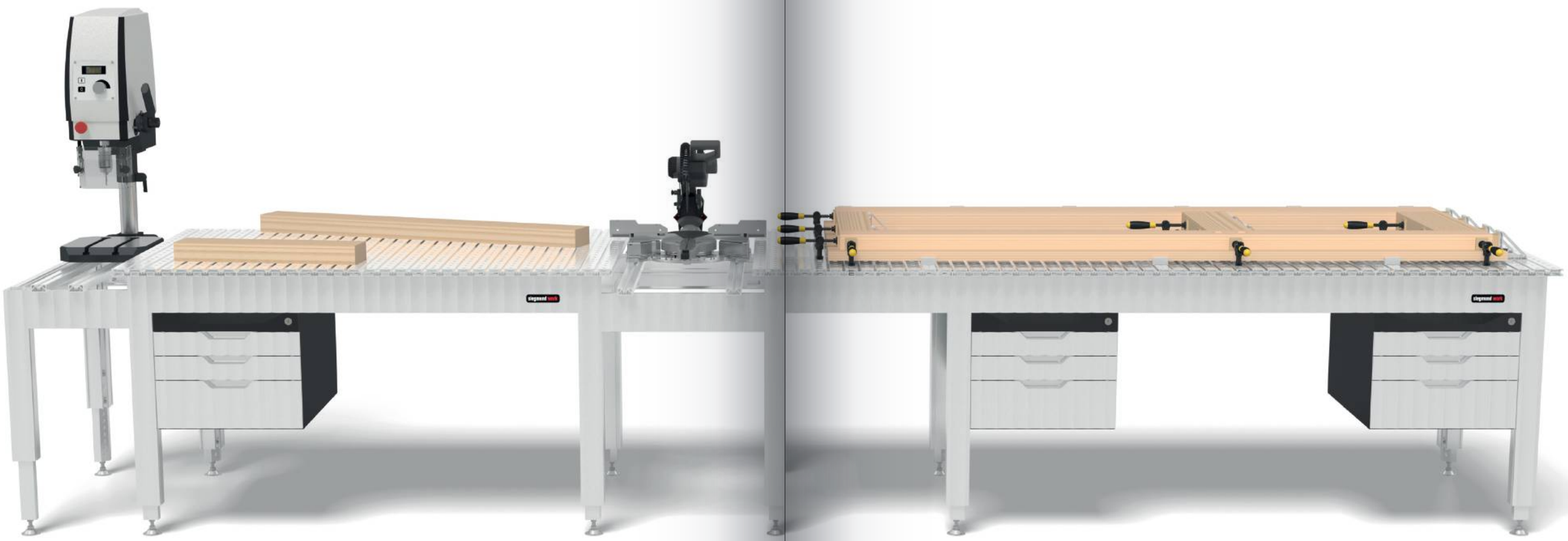

Stop and Clamping Square

Stop and Clamping Square 90 X Aluminum
elongated hole

AL 16

	L (a)	B (b)	H (c)	G	
2-160108.A	90 mm	50 mm	25 mm	0,07 kg	**12 £** •

Stop and Clamping Square 90 SL Aluminum
combination of borehole and elongated hole

AL 16

	L (a)	B (b)	H (c)	G	
2-160109.A	90 mm	50 mm	40 mm	0,08 kg	**14 £** •

Stop and Clamping Square 95 L Aluminum
combination of borehole and elongated hole, increased stability through struts

NEW

AL 16

	L (a)	B (b)	H (c)	G	
2-160117.A	95 mm	50 mm	95 mm	0,13 kg	**26 £** •

More information and product versions:

www.siegmund.com/
F-workbench

Bolts

Areal Clamping Bolt burnished
160590: Clamping range approx. 22-26 mm, 160590.3: Clamping range approx. 34-38 mm, 160590.4: Clamping range approx. 46-50 mm, recommended for clamping aluminum profiles, MUST NOT be used for connecting tables and U-shaped squares

B 16

		L (a)	SK	ZK1	ZK	AM1	AM	G	
2-160590	double	55 mm	50 kN	2 kN	4 kN	10 Nm	10 Nm	0,11 kg	**48 £** •

Fast Clamping Bolt without slot burnished
recommended for clamping aluminum profiles, without O-ring slot for a smooth surface, MUST NOT be used for connecting tables and U-shaped squares

B 16

		L (a)	SK	ZK	AM1	AM	G	
2-160511	double	53 mm	55 kN	10 kN	2,50 Nm	10 Nm	0,08 kg	**40 £** •

Screw Clamp

Basic Screw Clamp for workbench nitrided
Vertical Bar reinforced, Horizontal bar varnished / powder-coated, interchangeable prism, ball diameter spindle 8 mm, Trapezoid thread of spindle 12x4 mm, especially for surfaces made of aluminum profiles

BAR N 16

	B (b)	H (c)	G	
2-160621	110 mm	185 mm	0,65 kg	**28 £** •

L: Length, B: Width, H: Height, G: Weight, SK: Shearing Force, AM: Tightening Torque Steel, AM1: Tightening Torque Aluminum, clamping torque depends on material, ZK: Tensile Force Steel, ZK1: Tensile Force Aluminum

Prices plus VAT. Available from 01.05.2024

DISCOVER NOW EVEN MORE PRODUCTS AND ACCESSORIES

Browse our catalog or scroll through our website to discover our complete product line and the variety of our accessories and tools.

From useful stops and squares to tool storages and holders, we offer everything that makes your work even more efficient. Our accessories have been carefully developed and are perfectly matched to our welding tables and perforated plates.

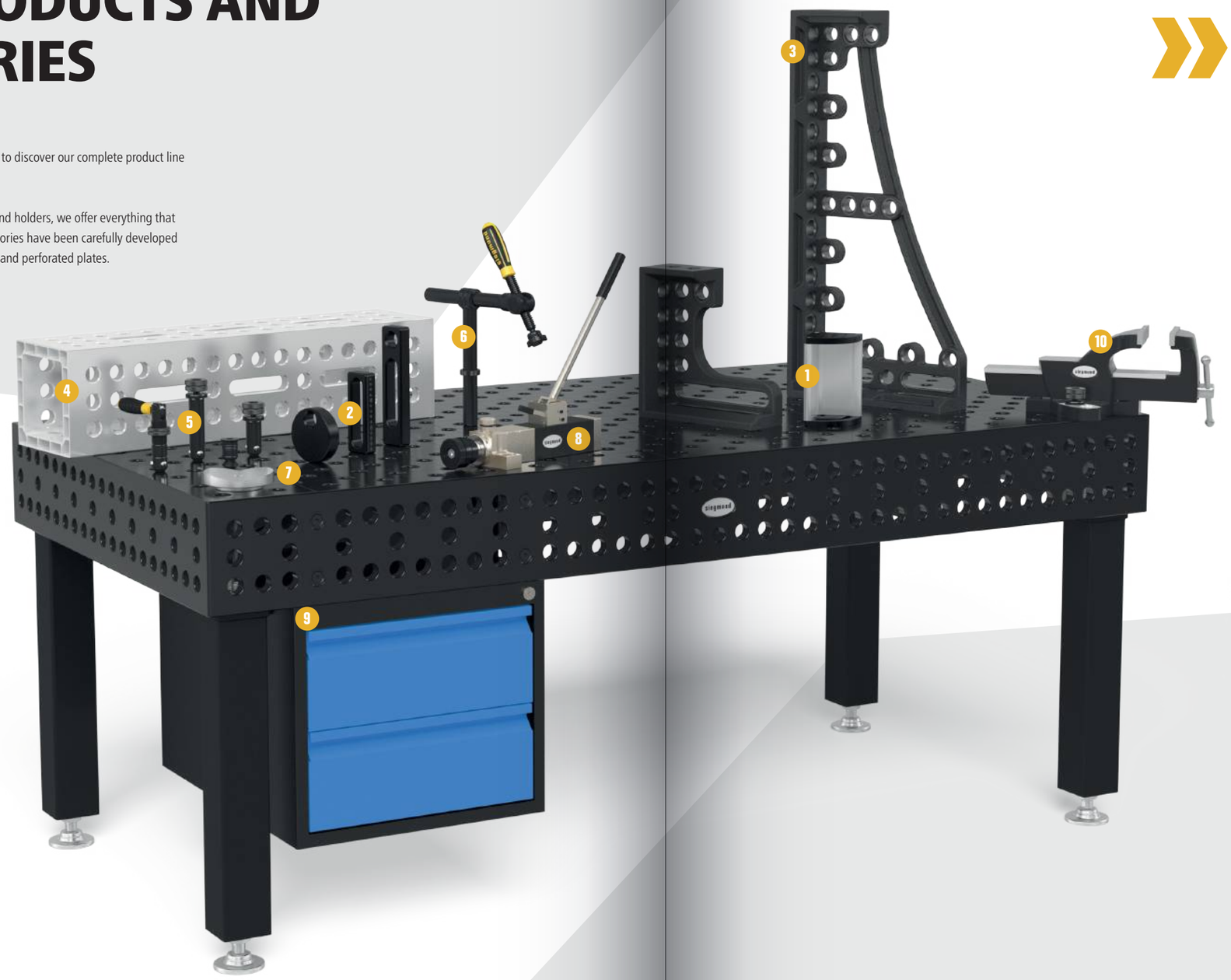

Tools & Accessories

1. New clamping system
2. Stops
3. Squares
4. Aluminum profiles
5. Bolts
6. Clamps
7. Prisms
8. Table press
9. Sub Table Box
10. Bench vices

- Maintenance products
- Accessories
- Zero point clamping system
- Magnetic Clamping Technology

Suitable working basis for every challenge and every requirement.

- Siegmund welding tables
- Laser welding cell
- Welding Cell
- Siegmund Workbench
- Siegmund Workstation
- Lifting platform
- Mobile lifting table
- Rotating table height adjustable
- Perforated Plates
- Octagonal tables
- Rail System
- Platform System
- Positioner

Discover the catalog now!

Immerse yourself into our fascinating world of welding and clamping and discover our versatile product line with high quality welding tables, accessories and much more! Browse our interactive catalog online or order your personal copy to thumb through it in the comfort of your own home.

www.siegmund.com/
F-catalog

Prices are quoted in £ sterling excluding VAT, packing and freight costs. We reserve the right to amend prices listed when subject to fluctuations in the Euro/£ sterling exchange rate. Our minimum order value is £ 50. Technical data are subject to change. The sale of Siegmund products from the Oberottmarshausen warehouse, is restricted to a worldwide network of appointed importers with resale through locally appointed distributors only. Our Terms and Conditions of Sale strictly apply. Subject to price changes and printing errors. Siegmund products are subject to continuous improvement and we reserve the right to amend and supersede all products where applicable.
All texts, pictures and design elements are copyrighted by the Bernd Siegmund GmbH. No part of this catalog may be edited analogously or digital or in another mode, may be duplicated or published out of the catalog without written approval of the legal owner. Offences are prosecuted.
© 2024 Bernd Siegmund GmbH

● Item produced for stock ○ Item produced on order

siegmund

Find our exhibition calendar at:

www.siegmund.com/F-exhibition

Producer:

Bernd Siegmund GmbH
Landsberger Str. 180
86507 Oberottmarshausen
Germany (Bavaria)
Phone +49 (0) 8203 96 07-0
info@siegmund.com
siegmund.com

Your distributor:

Surface Technology Products Ltd.
244/5 Heneage Street
UK - B7 4LY Birmingham West Midlands
Phone 0121 359 4322
Fax 0121 359 1817
sales@surtech.co.uk
www.surtech.co.uk